J | B
JONATHAN
BROWNING

All Lighting Design and Design Elements are ©2026 by Jonathan Browning Studios, Inc.

VALLAYER SCONCE

DESCRIPTION
The Vallayer Sconce is machined from solid brass before being patina'd and polished. The shade is made from cast and polished crystal.

FINISHES
Shown in Oil Rubbed Bronze (standard). Please inquire about our other finishes. Note: All finishes may vary slightly.

SHADE
Crystal

MODEL #	DIMENSIONS	NET WT.
2 4 2 1	6.375 W x 8"D x 18.25"OAH*	7 lbs

BACK PLATE / J-BOX
4.5" Diameter / Top to J-Box center: 2.25"

ELECTRICAL
1 x E12 4w LED Bulb

*Custom drop lengths can be specified.

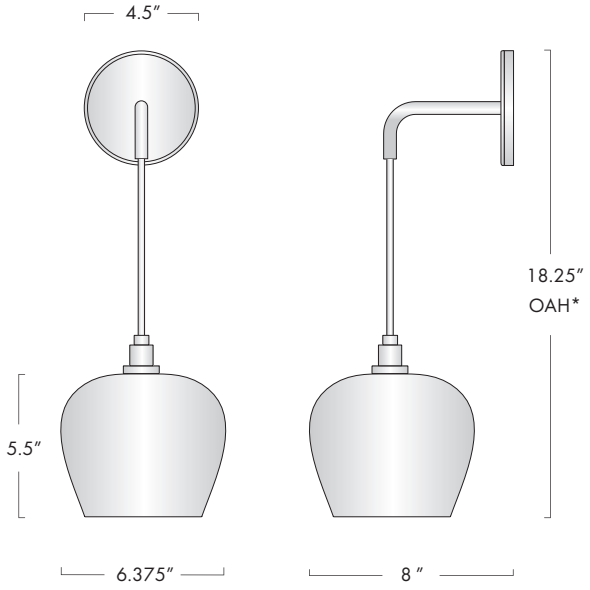

UL DIMMABLE 2700K